ELMO
V.le Certosa 8/B - 27100 Pavia Italy
Tel. ++39 382 529564 - 422372
Fax. ++39 382 527041
E-Mail: info@elmoitaly.com

# MOTORI IMMERSI PER ASCENSORI IDRAULICI
*SUBMERSIBLE MOTORS FOR HYDRAULIC LIFTS*
UNTEROELMOTOREN FUER HYDRAULISCHE AUFZUEGE
*MOTEURS IMMERGES DANS L'HUILE POUR ASCENSEURS HIDRAULIQUES*

C US 205390

60 Hz
24TS - U - 9S7-
1505-12

MOTORI TRIFASI *THREE PHASE MOTORS* DREIPHASEENMOTOREN *MOTEURS TRIPHASES*

Suitable to be coupled screw pumps having shaft Ø32 mm and flange Ø220 mm

*IN ANY MOMENT AND WITHOUT NOTICE ELMO CAN CHANGE MANUFACTURING PROCESS, PERFORMANCE FEATURES.*
LA ELMO S.r.l. SI RISERVA IL DIRITTO DI APPORTARE QUALSIASI VARIAZIONE SENZA ALCUN PREAVVISO.

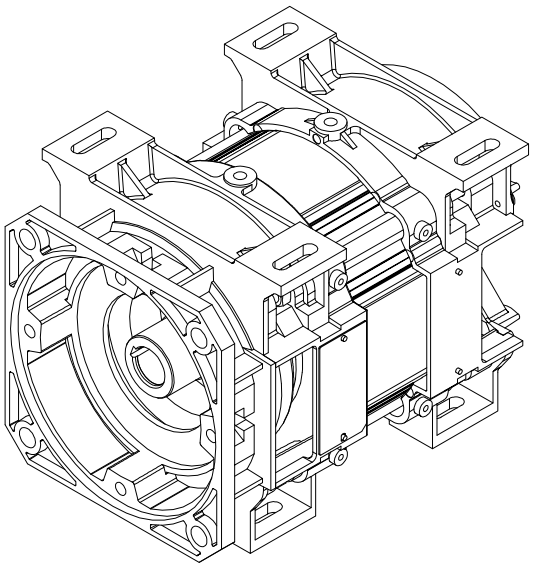

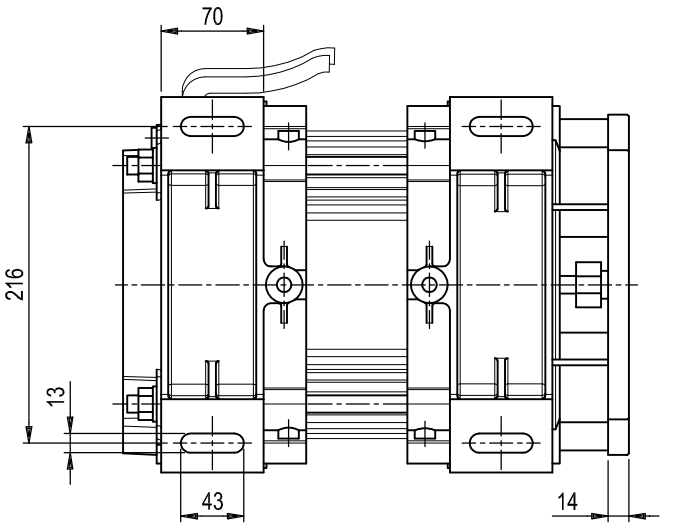


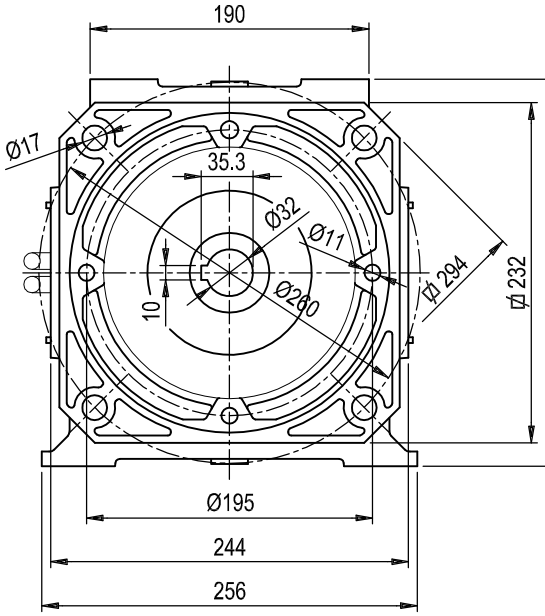


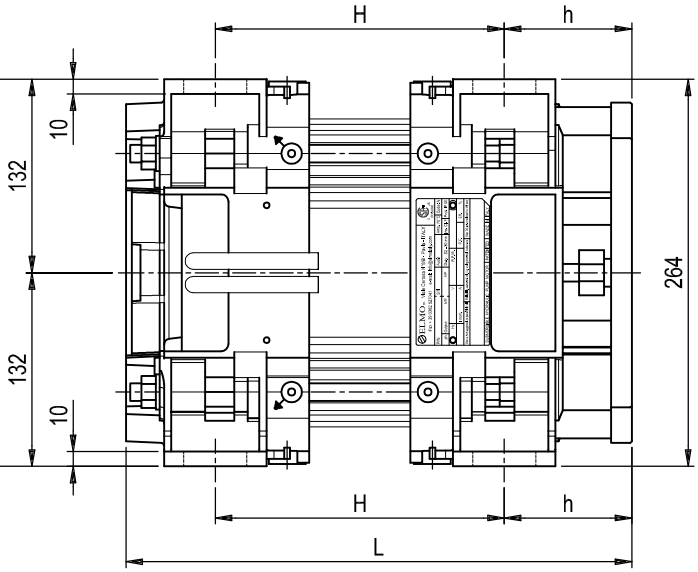


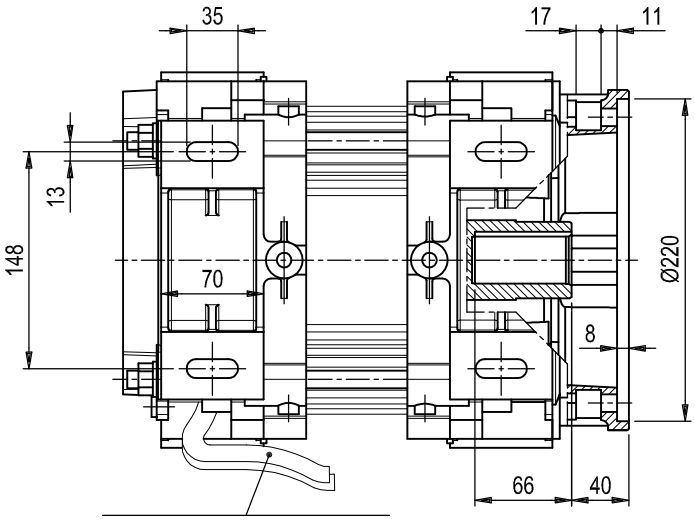


m. 2.20 LUNGH. CAVI ALIMENTAZIONE *LEADS LENGTH*

## MOTORS WITHOUT FLYWHEEL

| COD. BASE - *BASIC P/N* | | | | | | | | | | | | | | | | | | | | | | | | |
|---|---|---|---|---|---|---|---|---|---|---|---|---|---|---|---|---|---|---|---|---|---|---|---|---|
| GRANDEZZA - *SIZE* | POLARITA' - *POLARITY* | ALIMENTAZ. - *POWER SUPPLY* | FREQUENZA - *FREQUENCY* | POTENZA A 60 Hz *NOMINAL OUTPUT AT 60 Hz* | | | OMOLOGAZ. TIPO - *TYPE APPROVAL* | TENSIONE *VOLTAGE* | | | SERIE CAVI - *CABLE LENGTH* | ACCOPPIAMENTO - *SUITABLE TO* | SENZA VOLANO - *WITHOUT FLYWHEEL* | PIEDI FISSAGGIO - *FIXING FEET* | ALTRE QUOTE - *OTHER DIMENS.* | DIMENSIONI D'INGOMBRO *OVERALL DIMENSION* | | | POTENZA A 60 Hz *NOMINAL OUTPUT AT 60 Hz* | | | |
| | | | | kW | | | | V | | | | | | | | L | h | H | HP | | | |
| 2 | 4 | T | S | 1 | 5 | 0 | U | | | | | 9 | S | 7 | F | 360 | 87 | 212 | 2 | 0 | - | |
| | | | | 1 | 8 | 0 | | | | | | | | | E | 375 | | 227 | 2 | 5 | - | |
| | | | | 2 | 2 | 0 | | | | | | | | | D | 395 | | 247 | 3 | 0 | - | |
| | | | | 2 | 6 | 0 | | | | | | | | | C | 420 | | 272 | 3 | 5 | - | |
| | | | | 3 | 7 | 0 | | | | | | | | | B | 460 | | 312 | 5 | 0 | - | |
| | | | | 4 | 5 | 0 | | | | | | | | | A | 510 | | 362 | 6 | 0 | - | |
| | | | | 5 | 4 | 0 | | | | | | | | | X | 565 | | 417 | 7 | 3 | - | |